Cornhole Board Specs:

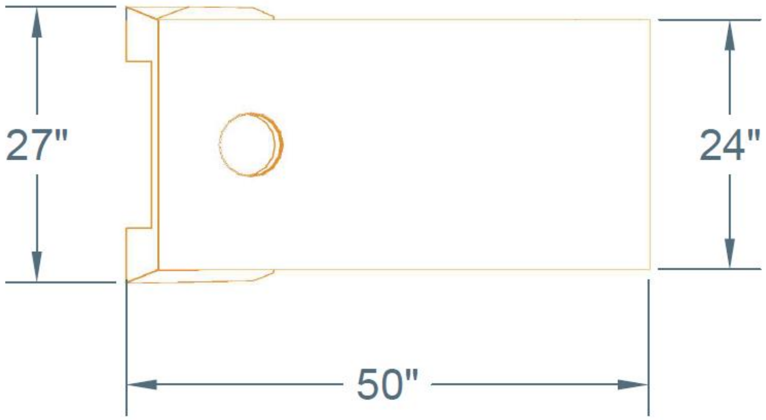

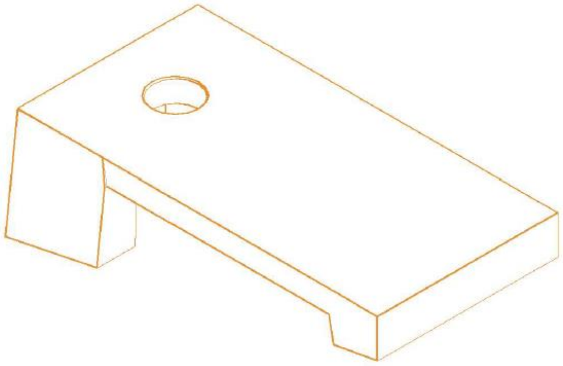

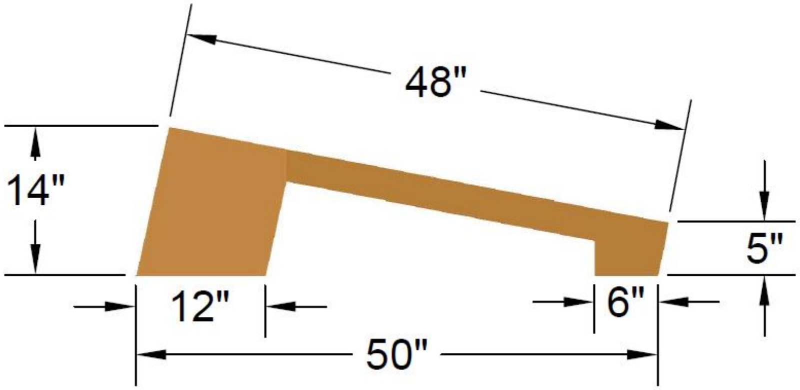
48"
14"
5"
12"
6"
50"

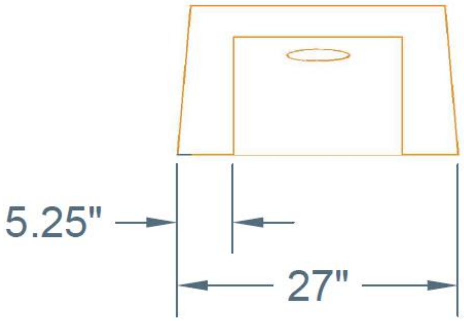

Approximate weight: 400 pounds per board.